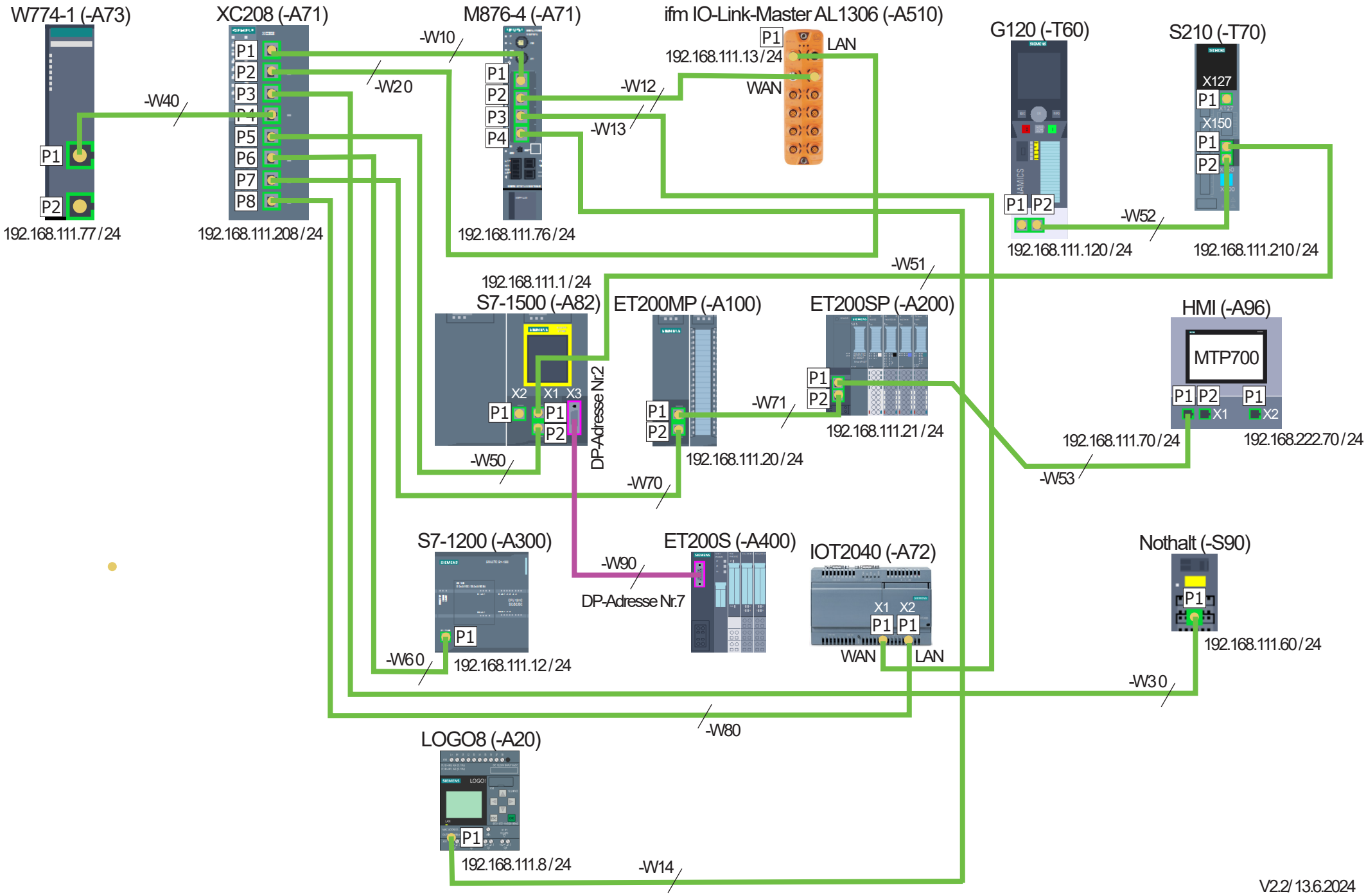SPS-Demo-Modell Topologie